KINETIC ENERGY

USER MANUAL

KERC2202N-W

Mini Wi-Fi and Zigbee Controllers

Manufacturer: KONSTRUCTHOR ALL S.R.L., Str. Teleorman nr. 53A, ap. 2, 400573 Cluj-Napoca, Cluj County, Romania
Read this manual before installation and keep it. Version v3, October 2026.

Overview

The KERC2202N-W is a 2-channel mini on/off controller (2 × 5 A) with Wi-Fi 2.4 GHz and RF 433 MHz. It controls two lighting circuits independently. It fits in a switch box, a socket box, a ceiling void or next to the luminaire. It receives commands at 433 MHz from KINETIC ENERGY switches (wireless, battery-free). You can also control it from the Tuya Smart / Smart Life app and by voice. It keeps a terminal for the existing wired switch (push button (momentary) or rocker switch), so you can control each circuit from both the wired switch and the wireless switch.

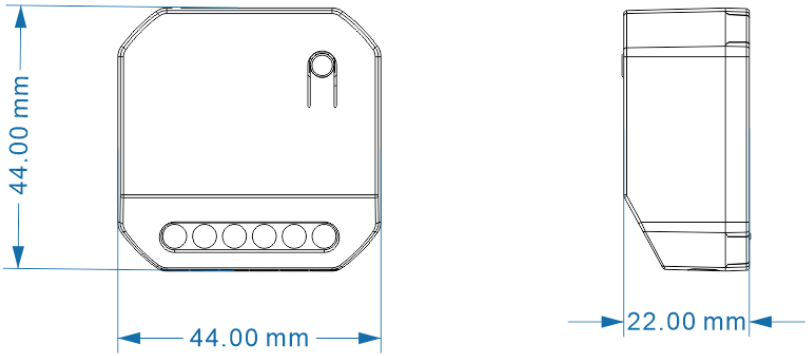

Dimensions of the mini controller

Specifications

Parameter	KERC2202N-W
Function	On/off, 2 channels
Supply voltage	100–240 V AC, 50/60 Hz
Rated current	2 × 5 A
Maximum load	LED: 2 × 500 W; resistive: 2 × 1100 W (at 220 V)
Communication	Wi-Fi 2.4 GHz (IEEE 802.11 b/g/n) + RF 433 MHz
Terminals	N, L, L1, L2, S1, S2
KINETIC ENERGY switches stored	up to 10 per controller
Operating temperature	−20 °C ... +55 °C
Operating range	up to 80 m outdoors / 25 m indoors
Dimensions	44 × 44 × 22 mm

> Note: Operating ranges are laboratory values. In practice they depend on the building (walls, reinforcement, metal enclosures). The maximum load can vary with the specifications of the light source manufacturer.

You can pair one KINETIC ENERGY switch with an unlimited number of controllers. You can pair with any rocker of a single, double or triple switch.

Connection

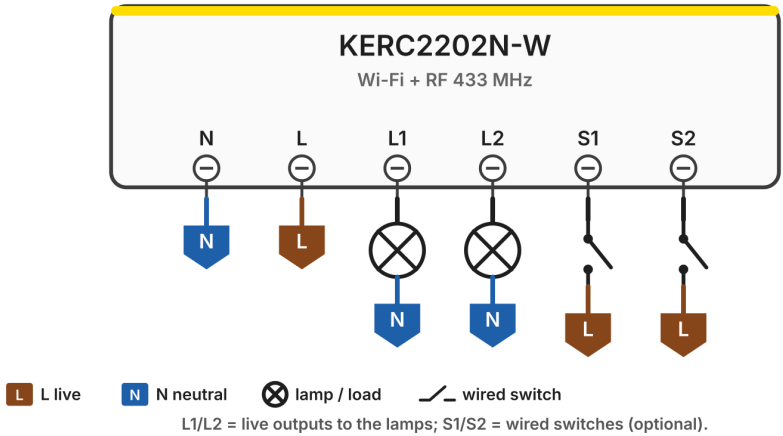

Wiring diagram — KERC2202N-W

Connect the controller supply line to the mains phase and neutral. Connect the outputs to the load with a cable rated for the installation voltage. Follow the wiring diagram.

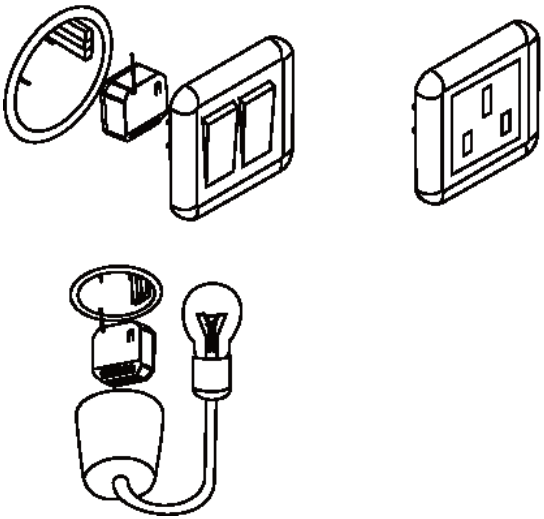

Mounting locations: in the switch or socket box, in the ceiling, or next to the luminaire

- **N** — supply neutral
- **L** — supply phase

- **L1 / L2** — phase output to the load of channel 1 / channel 2
- **S1 / S2** — inputs for the wired switches of channel 1 / channel 2 (push button (momentary) or rocker switch)

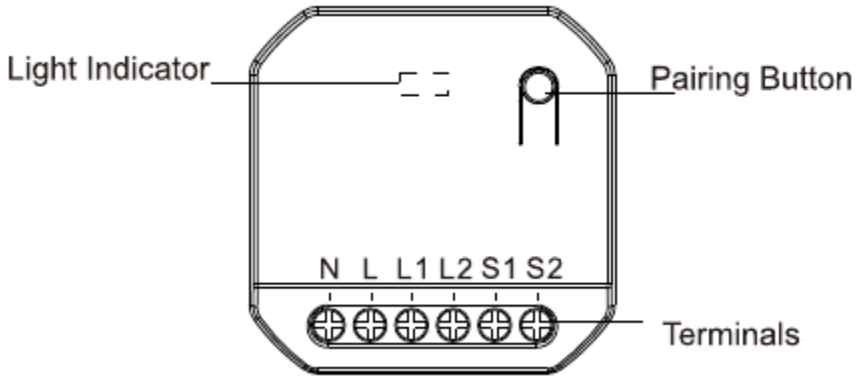

Terminals, indicator LED and pairing button — KERC2202N-W

Pairing with KINETIC ENERGY switches

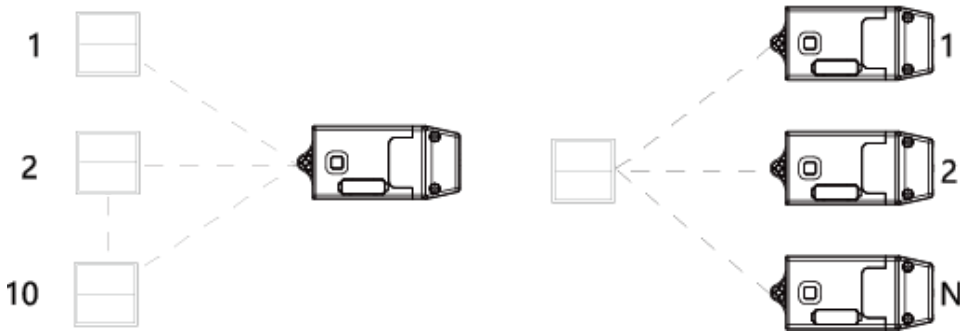

One controller stores up to 10 switches; one switch can control any number of controllers

Standard pairing (from the controller button)

1. Power the controller.
2. Press and hold the pairing button for 3 seconds, until the LED starts to blink slowly. Release the button.
3. Press the required rocker of the KINETIC ENERGY switch once.
4. The LED goes out: pairing is complete.
5. To pair more switches, repeat steps 2–4.

Standard pairing: 3 seconds on the controller button, then one press on the switch

Second channel

1. Press the pairing button twice quickly to switch to the other channel.
2. Repeat the standard pairing steps for the selected channel.

Pairing from the app

1. Open the controller in the Tuya Smart / Smart Life app.
2. Tap "Pairing" → "Start Pairing".
3. When the app shows "waiting for pairing", press the rocker of the KINETIC ENERGY switch that you want to pair.
4. The app confirms with the message "Pairing succeeded".

Pairing from the wired switch

This method works only within the first 2 minutes after the controller is powered.

1. Power the controller.
2. Within the first 2 minutes, press the wired switch connected to terminal S five times, within 2 seconds (the switch on S1 for channel 1, on S2 for channel 2).
3. The controller enters pairing mode: the light starts to blink.
4. Press the required rocker of the KINETIC ENERGY switch once.
5. The blinking stops: pairing is complete.

Directional pairing

Directional pairing separates the commands: the left rocker switches the circuit off and the right rocker switches it on. Use it with 2-gang or 6-gang switches, for example when the same switch controls several controllers.

1. Press and hold the pairing button for 3 seconds, until the LED starts to blink.
2. Press any rocker of the switch 4 times quickly, within 1 second.

3. After pairing, use the left rocker to switch off and the right rocker to switch on.

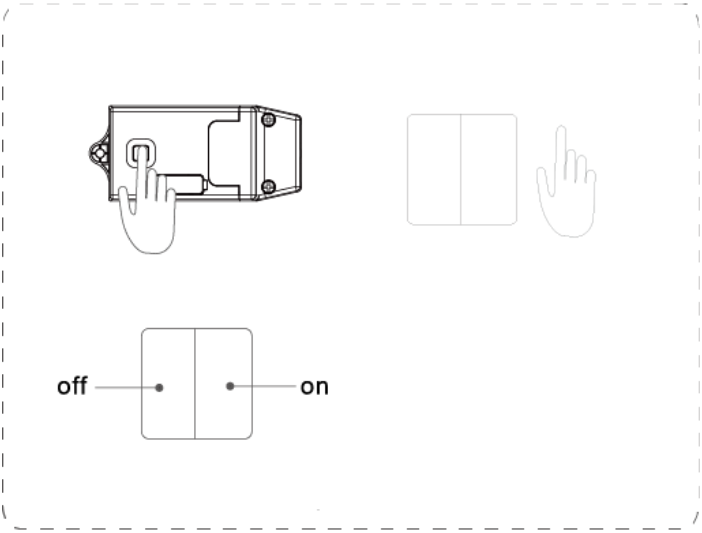

Directional pairing: left = off, right = on

Clearing pairings

From the app:

1. Tap "Pairing" → "Clear Pairing".
2. Select the channel.
3. The app confirms with the message "Clearing Successful".

From the controller button:

1. Press and hold the pairing button for approximately 12 seconds.
2. The LED blinks quickly, then stays on, then goes out. Release the button.
3. All switches paired on that channel are cleared.
4. Press the button twice quickly to select the other channel and repeat.

Tuya Smart / Smart Life app

Tuya Smart App

Smart Life App

QR codes for downloading the Tuya Smart and Smart Life apps

Adding the device in the app works only on a 2.4 GHz Wi-Fi network (5 GHz networks are not supported). The phone and the controller must be on the same network, as close as possible to the router.

1. Download the Tuya Smart or Smart Life app and create an account.
2. Power the controller. The LED must blink quickly, twice per second (EZ mode, default).
3. If the LED does not blink like this, press and hold the pairing button for 10 seconds: the LED changes from slow blinking to fast blinking, then stays on. Release the button. The controller returns to the mode for adding the device in the app.
4. In the app, tap "+" → "Add Device". The app detects the controller automatically (it appears as a Wi-Fi switch). Confirm.
5. Enter the Wi-Fi network name and password and follow the steps in the app.
6. After adding the device in the app, the controller appears on the home page. You can control it from anywhere and use it in scenes and schedules.

If you change the Wi-Fi network name or password, add the controller to the app again.

AP mode (if adding in EZ mode fails)

1. With the controller in EZ mode, press and hold the pairing button for 10 seconds. Release the button when the LED stays on.
2. In AP mode, the LED blinks slowly and goes out once every two seconds.
3. In the app, tap "+" → "Add Device", select the detected controller, enter the Wi-Fi password, then change "EZ Mode" to "AP Mode" in the top right corner.
4. Follow the steps in the app.

5. To return from AP mode to EZ mode, press and hold the button for 10 seconds: the LED blinks quickly, then stays on. Release the button.

Voice control

Controllers added in Tuya Smart / Smart Life can be controlled with Amazon Alexa or Google Home. You need the Amazon Alexa or Google Home app, an account in that app and a compatible smart speaker (Echo, Echo Dot, Google Home, Google Home Mini, etc.).

1. In the app, give the controller an easy-to-pronounce name (for example "kitchen light").
2. In the Alexa app, search for the "Smart Life" skill and add it. In Google Home, search for "Smart Life" under "Works with Google" and add it.
3. Link the account with the username and password used in Tuya Smart / Smart Life.
4. Give a voice command, for example: "Alexa, turn on kitchen light" or "Ok Google, turn off kitchen light".

Repeater mode (bridge)

> Note: If one switch controls several controllers and one of them is in repeater mode, pair the switch with all controllers using directional pairing. Otherwise, the command may reach the same controller twice and the light does not change state.

Repeater mode (bridge) extends the range of the switches: the controller retransmits the commands it receives to controllers that are further away. The transmit power does not increase.

1. Choose the controller closest to the switch.
2. Press and hold the pairing button for 7 seconds, until the LED changes from slow blinking to fast blinking. Release the button.
3. The LED blinks once every 2 seconds: repeater mode is active.
4. To deactivate, repeat steps 2–3.

The controller also works normally with wireless switches while the LED blinks in repeater mode.

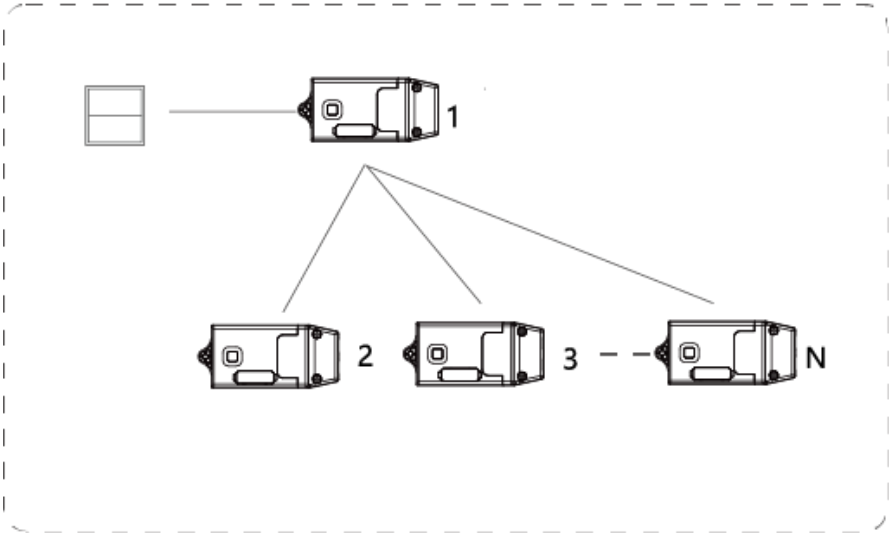

Repeater mode: controller 1 retransmits commands to controllers 2...N

Functions

Wired switch type

The controller detects the type of wired switch connected to terminal S automatically (push button (momentary) or rocker switch).

1. After powering and wiring correctly, press the wired switch once, briefly.
2. Do not press several times and do not hold: the type would be registered incorrectly.
3. To reset the type, disconnect the controller power, power it again and repeat step 1.

Behaviour after a power failure

By default, after power returns the controller stays off (output "OFF"). You can change this behaviour in the app, if the app offers the option.

Troubleshooting

- **Pairing does not work.** First check that the LED lights up. If pairing was lost after a power failure, pair again.
- **The controller does not respond.** Check the LED. If it does not light up at all, check the power supply. A load above the rated value or a short circuit can damage the controller.

- **The controller does not connect to Wi-Fi.** Check that the network is 2.4 GHz and that the LED blinks quickly before adding the device. Move the phone, controller and router closer together. If it still fails, use AP mode.
- **The controller occasionally appears "offline" in the app.** The router has probably reached its maximum number of connected devices. Disconnect unnecessary devices or use a higher-performance router.
- **The light stays faintly on when switched off.** Check that phase (L) and neutral (N) are connected as marked on the controller.
- **The wired switch controls incorrectly.** The switch type was registered incorrectly. Reset it (see "Wired switch type").

Safety instructions

- Installation must be carried out only by a qualified electrician, with the circuit switched off at the circuit breaker.
- For indoor use in dry rooms only, installed in a wall box, false ceiling or distribution board, out of direct reach.
- Do not exceed the maximum load in the specifications. For motors, transformers or other inductive loads, check compatibility before installation.
- Do not modify the product and do not use it if it is damaged.
- The product contains a radio transmitter. Metal enclosures and metal distribution boards reduce the operating range.

Compliance and legal information

Manufacturer

KONSTRUCTHOR ALL S.R.L. · Str. Teleorman nr. 53A, ap. 2, 400573 Cluj-Napoca, Cluj County, Romania. Phone +40 765 999 915 · office@konstructhor.ro · www.kinetic-energy.eu.

Simplified EU declaration of conformity

Hereby, KONSTRUCTHOR ALL S.R.L. declares that the radio equipment type KERC2202N-W is in compliance with Directive 2014/53/EU. The full text of the EU declaration of conformity is available at the following internet address: www.kinetic-energy.ro/declaratie-de-conformitate

Frequency bands and maximum radio-frequency power transmitted

Model	Frequency band	Maximum power transmitted
KERC2202N-W	433 MHz; Wi-Fi 2.4 GHz	4.00 dBm e.r.p. (2.51 mW); 16 dBm e.i.r.p. (40 mW)

There are no geographical restrictions on putting into service in the EU Member States.

Waste electrical and electronic equipment (WEEE)

The crossed-out wheeled bin symbol means that the product must not be disposed of with household waste. At the end of its life, take it to a collection point for electrical and electronic equipment or return it to the shop where you bought it. Batteries must be taken separately to a collection point for used batteries.

Warranty

For consumers, the seller is liable for any lack of conformity that exists at delivery and becomes apparent within two years of delivery (Directive (EU) 2019/771; in Romania, Government Emergency Ordinance no. 140/2021). Defects caused solely by incorrect installation, overload, moisture or unauthorised work are not covered. Keep your invoice.

KINETIC ENERGY is a registered trademark. Up-to-date manual and declaration of conformity: www.kinetic-energy.eu. Manual version: v3, October 2026.