KINETIC ENERGY

USER MANUAL

KERC602

RF and Wi-Fi Relay Controllers

Manufacturer: KONSTRUCTHOR ALL S.R.L., Str. Teleorman nr. 53A, ap. 2, 400573 Cluj-Napoca, Cluj County, Romania
Read this manual before installation and keep it. Version v3, October 2026.

Overview

The KERC602 is a 1-channel relay controller (RF 433 MHz) that switches a lighting circuit or other load on and off on command from KINETIC ENERGY switches (wireless, battery-free). It fits in a box, in a false ceiling or next to the luminaire.

You can combine switches and controllers freely: several rockers can control one controller (up to 10 rockers) and one rocker can control any number of controllers.

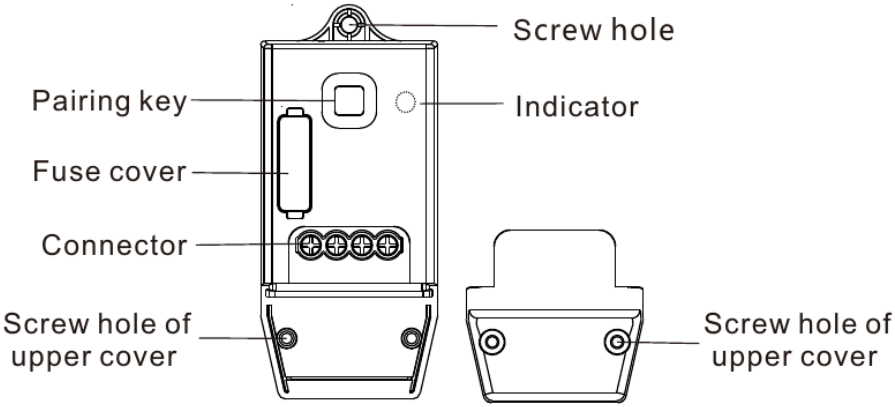

Pairing button, indicator, fuse cover, terminals and fixing holes

Specifications

Parameter	KERC602
Supply voltage	100–240 V AC, 50/60 Hz
Number of channels	1
Maximum current	5 A
Maximum LED power	600 W
Communication	RF 433 MHz
App	–
KINETIC ENERGY buttons stored	up to 10
Receiver sensitivity	-110 dBm
Operating range	up to 80 m outdoors / 25 m indoors
Operating temperature	-25...+55 °C
Dimensions	98 × 44 × 31 mm

> Note: Operating ranges are laboratory values. In practice they depend on the building (walls, reinforcement, metal enclosures).

Connection

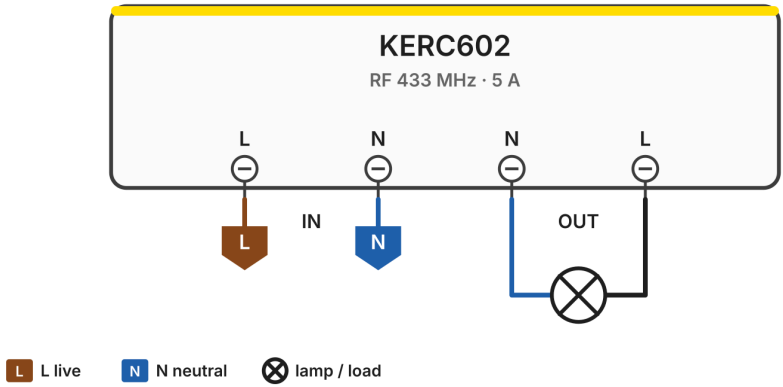

Wiring diagram — KERC602

Installation must be carried out only by a qualified electrician, with the power disconnected at the circuit breaker. Follow the L (phase) and N (neutral) symbols on the

housing: supply phase and neutral on the input, lamp on the output.

1. Disconnect the power at the circuit breaker.
2. Connect the supply phase (L) and neutral (N) to the input terminals.
3. Connect the lamp to the output terminals (L, N).
4. Close the terminal cover and secure it with the screws.

- Method 1: stick the controller with the double-sided tape supplied, on a clean surface.
- Method 2: fix the controller with self-tapping screws into wall plugs.

Pairing with KINETIC ENERGY switches

Each controller stores up to 10 rockers. One rocker can be paired with any number of controllers. You can pair with any rocker of a single, double or triple switch.

Standard pairing

1. Power the controller.
2. Press and hold the pairing button for approximately 3 seconds, until the indicator blinks slowly (once per second). Release the button.
3. Press the selected rocker of the KINETIC ENERGY switch once. Do not press several times in a row.
4. The indicator goes out: pairing succeeded.
5. To pair more switches, repeat the steps.

After pairing, the switch controls the controller. With no load connected, the state is shown by the indicator: on when the relay is on.

Directional pairing

Directional pairing separates switching on from switching off: one rocker switches on, the other switches off. This way, several controllers controlled by the same switch always stay in the same state. It works only with rocker switches and with 2-gang or 6-gang switches.

1. Power the controller.
2. Press and hold the pairing button for approximately 3 seconds, until the indicator blinks. Release the button.
3. For a rocker switch: press once at the top and once at the bottom, within a maximum of 0.5 seconds.
4. For a switch with rockers: press any rocker 4 times quickly, within a maximum of 1 second.

5. The indicator goes out: pairing succeeded.
6. Rocker switch: press the bottom to switch on and the top to switch off. Switch with rockers: the left rocker switches off, the right rocker switches on.

Clearing pairings

1. Press and hold the pairing button for approximately 12 seconds.
2. The indicator blinks, stays on, then goes out. Release the button.
3. All switches paired with the controller are cleared.
4. To use the controller again, pair it again.

Repeater mode (bridge)

Repeater mode (bridge) helps when the switch is far from one of the controllers, or when the signal passes through many walls, in a setup with one switch and several controllers. A controller with repeater mode active retransmits the commands it receives to the other controllers.

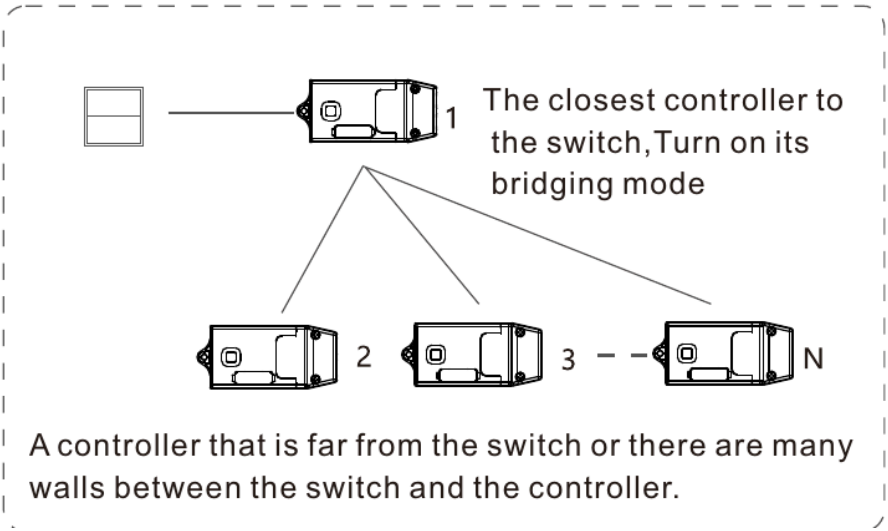

Controller 1, closest to the switch, has repeater mode active; controllers 2...N are further away or behind walls

1. Pair the switch with all controllers using directional pairing.
2. Choose the controller closest to the switch (controller 1 in the figure).
3. Press and hold its pairing button for approximately 7 seconds. The indicator changes from slow blinking to fast blinking.

4. Release the button.
5. After a few seconds, the indicator blinks once every 2 seconds: repeater mode is active.
6. To deactivate, repeat steps 3–4.

Fuse

The controller has an internal fuse, under a separate cover. If the load exceeds the rated current or there is a short circuit, the fuse can blow and the controller stops responding.

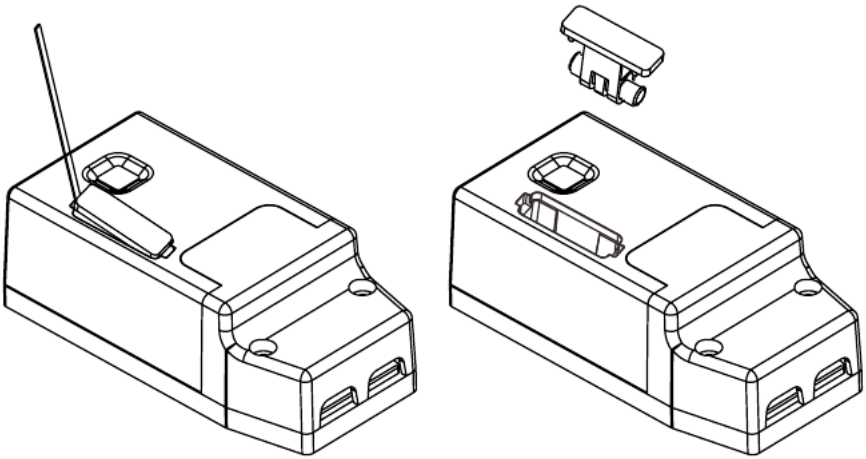

Opening the fuse cover

1. Remove the cause: check that there is no short circuit and that the load does not exceed the rated current.
2. Disconnect the power at the circuit breaker. **Do not open the cover while the controller is live.**
3. Open the fuse cover.
4. Check the fuse. If it has blown, replace it with one of the same type and specifications.
5. Close the cover, then restore power to the circuit.

Troubleshooting

Problem	What to do
After power-up, the indicator does not light up when the pairing button is pressed	The fuse has probably blown (overload or short circuit). Remove the cause and check the fuse as described in the "Fuse" section, with the power disconnected.
The LED lamp glows faintly when off	Check that phase (L) and neutral (N) are connected to the input as shown by the symbols on the controller.
The controller does not react to the switch	Pair again. If the switch is far away or behind thick walls, use repeater mode (bridge) on a closer controller.

Safety instructions

- Installation must be carried out only by a qualified electrician, with the circuit switched off at the circuit breaker.
- For indoor use in dry rooms only, installed in a wall box, false ceiling or distribution board, out of direct reach.
- Do not exceed the maximum load in the specifications. For motors, transformers or other inductive loads, check compatibility before installation.
- Do not modify the product and do not use it if it is damaged.
- The product contains a radio transmitter. Metal enclosures and metal distribution boards reduce the operating range.

Compliance and legal information

Manufacturer

KONSTRUCTHOR ALL S.R.L. · Str. Teleorman nr. 53A, ap. 2, 400573 Cluj-Napoca, Cluj County, Romania. Phone +40 765 999 915 · office@konstructhor.ro · www.kinetic-energy.eu.

Simplified EU declaration of conformity

Hereby, KONSTRUCTHOR ALL S.R.L. declares that the radio equipment type KERC602 is in compliance with Directive 2014/53/EU. The full text of the EU declaration of conformity is available at the following internet address: www.kinetic-energy.ro/declaratie-de-conformitate

Frequency bands and maximum radio-frequency power transmitted

Model	Frequency band	Maximum power transmitted
KERC602	433.28 MHz	−8.09 dBm e.r.p. (0.16 mW)

There are no geographical restrictions on putting into service in the EU Member States.

Waste electrical and electronic equipment (WEEE)

The crossed-out wheeled bin symbol means that the product must not be disposed of with household waste. At the end of its life, take it to a collection point for electrical and electronic equipment or return it to the shop where you bought it. Batteries must be taken separately to a collection point for used batteries.

Warranty

For consumers, the seller is liable for any lack of conformity that exists at delivery and becomes apparent within two years of delivery (Directive (EU) 2019/771; in Romania, Government Emergency Ordinance no. 140/2021). Defects caused solely by incorrect installation, overload, moisture or unauthorised work are not covered. Keep your invoice.

KINETIC ENERGY is a registered trademark. Up-to-date manual and declaration of conformity: www.kinetic-energy.eu. Manual version: v3, October 2026.